FIRST ANGLE PROJECTION (ALL DIMENSIONS ARE IN mm)

REV.	DATE	ALTERED / CHECKED / APPROVED	REV.	DATE	ALTERED / CHECKED / APPROVED	ADDITIONAL INFORMATION
			01	19.12.08		STATUS OF DRAWING
			DRG. UPDATED & DIGITISED			DISTRIBUTION OF PRINTS: O/C-1 TAM-3 TNX-1

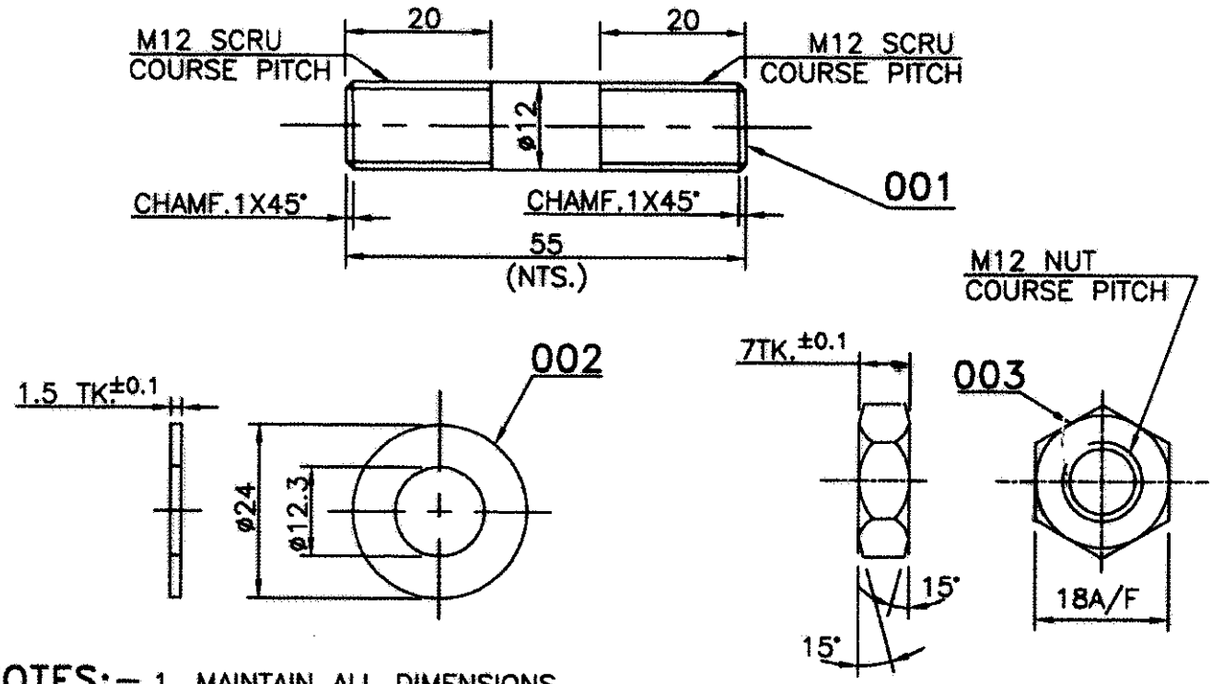

NOTES:– 1. MAINTAIN ALL DIMENSIONS.
2. REMOVE BURRS & SHARP EDGES.

FINISH:– ALL ITEMS TO BE BRIGHT ELECTROTINNED TO 8 MICRONS TKNS. TO PR. SPECN. AA 0673611.

VAR. 00	REMARKS	VAR.	ITEM NO.	DESCRIPTION	STD	MATL. CODE / MATL. SPCN.	A C	UNIT	UNIT WT. KG. / QTY.
			003	M12 HEX. NUT GR.A 7.0TKX18A/F		AA7151113048 / AA7151113			
			002	ø12.3 PLAIN WASHER 1.5TK.X24.0 OD.		AA12114			
			001	M12X55 LG. STUD GR.A.		AA12023			

28 → CARD TYPE-3 | 28 → CARD TYPE-1 | 28 → CARD TYPE-2

REF. DRG. NO.

SIGN. & DATE

BHARAT HEAVY ELECTRICALS LTD.
BHOPAL

	NAME	SIGN	DATE	NO. OF VARI.
DRN	R.K.S.	–Sd–	30.12.00	–
CKD	M.VERMA	–Sd–	30.12.00	
APPD	M.VERMA	–Sd–	30.12.00	

INVENTORY NO.

DEPT TME	UNTOL.DIMS. GR.		SCALE	WEIGHT (K.G.)	REF. TO ASSY. DRG.	ITEM NO.	NO. OF ITEM
CODE 405	M AA0230208		1:1	–	04303581001	013,014 & 015	003

TITLE SPECIAL HARDWARES (BRASS&COPPER) FOR 450 AMP. DIODE WHEEL ASSY. FOR 140 MM. SHAFT DIA. ALTERNATOR TA-7003BX

DRAWING NO. 44303581002 REV. 01

SHT. No. 01 NO. OF SHT. 01

THE INFORMATION ON THIS DOCUMENT IS THE PROPERTY OF BHARAT HEAVY ELECTRICALS LIMITED
IT MUST NOT BE USED DIRECTLY OR INDIRECTLY IN ANY WAY DETRIMENTAL TO THE INTEREST OF THE COMPANY

F